Exam Date & Time: 09-Jun-2025 (02:00 PM - 05:00 PM)

MANIPAL ACADEMY OF HIGHER EDUCATION

MIT BLR - BTech IV Semester Makeup Examination, June -2025

Analog Integrated Circuits [ECM-2223]

Marks: 50 **Duration: 180 mins.**

PART-A

Answer all the questions.

1)

A) Design a circuit using a single op-amp to get the following output voltage: $V_O = 10V_1 + 5V_2 - 0.5V_3 - 4V_4$, where V_1, V_2, V_3 and V_4 are input voltage sources. Provide the circuit diagram with suitable resistor values. (4)

B) In an op-amp, when non-inverting input voltage $v_1 = 50\ \mu V$ and inverting input voltage $v_2 = -50\ \mu V$, the output voltage is 10 V. For the same op-amp when $v_1 = v_2 = 10$ mV, the output is 0.2 V. Determine the CMRR of the op-amp. (3)

C) (i) With the help of a circuit diagram, illustrate how the output resistance of an op-amp can be practically determined. (ii) Suppose the output of op-amp is 5 V when no-load is connected, and the output is 4.5 V when a 500 Ω load is connected, determine the output resistance of the op-amp. (3)

2)

A) Design a high-pass Butterworth filter having 5 kHz cutoff frequency and 24 dB/ octave gain roll-off in the stopband. Calculate the overall gain in the passband of the designed circuit. (4)

B) Analyze the op-amp circuit shown below and draw its input and output waveforms if $v_{in} = 50 \sin(200\pi t)$ mV.

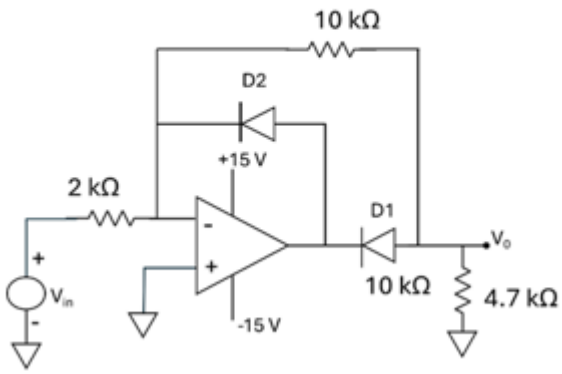

(3)

C) (3)

Identify the circuit shown below and derive the expressions for its magnitude and phase responses. Calculate the resistor values to obtain a phase shift of −90° at 1 kHz frequency, choosing C = 0.1 μF.

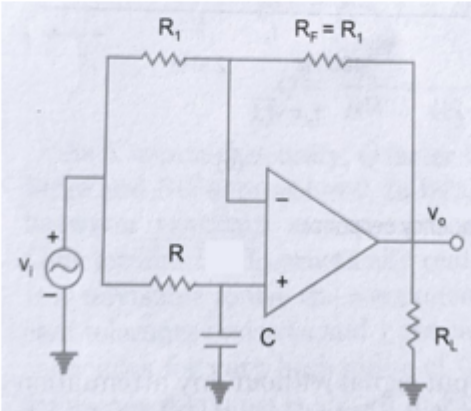

3)

A) Design an op-amp circuit that generates a square wave of frequency 1 kHz and duty cycle variable from 25% to 75%. Draw the circuit and waveforms of output voltage and voltage across the capacitor. Assume $\pm V_{sat} = \pm 12V$. (4)

B) Draw the output waveform of the op-amp for the input v_2 as shown, for (i) $v_1 = 0$ V (ii) $v_1 = 4$ V. Assume $\pm V_{sat} = \pm 10V$.

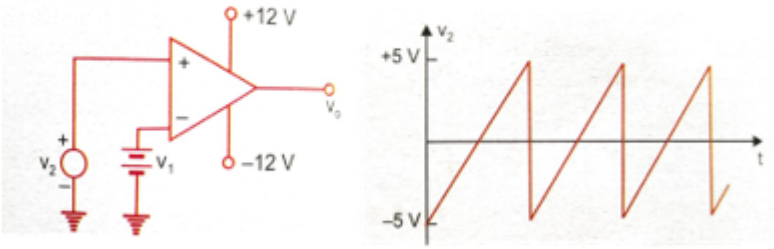

(3)

C) Examine the given circuit and derive an expression for the output voltage. Determine suitable resistor values to achieve a sensitivity of 0.5 V/nA, ensuring that no resistor exceeds 1 MΩ.

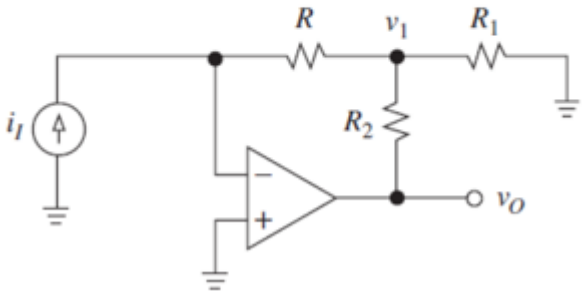

(3)

4) (4)

A)

The 555-timer shown below has $R_{A1} = 100\ \Omega$, $R_B = 10\ k\Omega$, $C = 0.1\ \mu F$ and R_{A2} variable from 0 to 20 kΩ. Determine (i) minimum and maximum values of output frequency, (ii) minimum and maximum values of duty-cycle of the output.

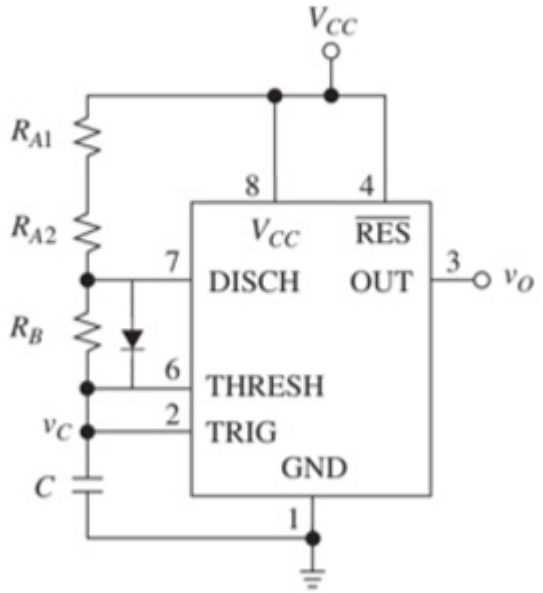

B) Draw the circuit of dual-slope ADC and explain its operation while converting an analog input signal of 7 V into 8-bit digital output with a reference voltage of −10 V. (3)

C) Draw the circuit of 4-bit binary weighted resistor DAC with R = 18 kΩ and reference voltage of 5 V. Determine the value of feedback resistor required to get full-scale output of −7.5 V. Also find the resolution of this DAC. (3)

5)

A) (i) With a neat block diagram, explain the operation of PLL IC 565. (ii) Compute the free-running frequency, lock-in range and capture range of PLL with $R_T = 10\ k\Omega$, $C_T = 0.01\ \mu F$, $C = 10\ \mu F$ and supply voltage is ±5 V. (4)

B) Illustrate how the LM317 IC can be used as an adjustable voltage regulator. (3)

C) Consider an instrumentation amplifier shown below. If R = 6 kΩ, $R_g = 3k\Omega$, input voltages $V_1 = 1.9$ V and $V_2 = 4.2$ V, and the op-amps are ideal, find V_{out}, V_{Rg}, I_{Rg} and the voltages at nodes 3 & 4.

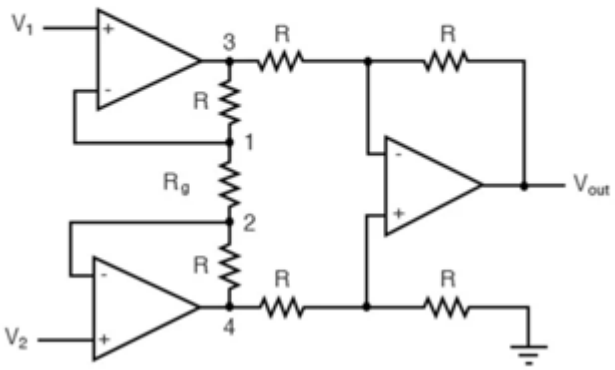

(3)

-----End-----